User Manual

RISH Multi 18S IR

Analog-Digital Multimeter

15030762 (REV B)

RISHABH INSTRUMENTS

Measure, Control & Record with a Difference

RISHABH INSTRUMENTS PVT. LTD.
F -31 , MIDC SATPUR, NASHIK - 422007
Tel. : +91 253 2202160 , 2202202
Fax : +91 253 2351064
E-mail : marketing@rishabh.co.in
Web : www.rishabh.co.in

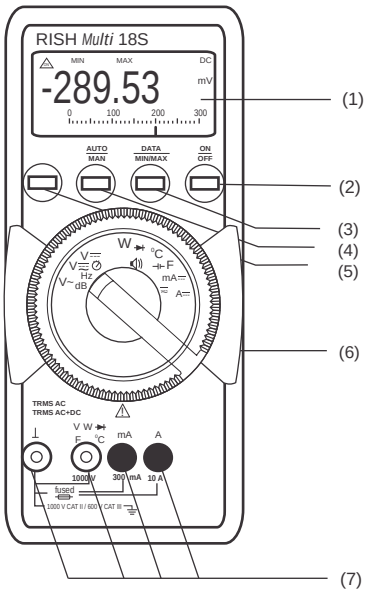
RISH *Multi* 18S
MIN
MAX
DC
mV
-289.53
0
100
200
300
AUTO
MAN
DATA
MIN/MAX
ON
OFF
W
°C
V
F
Hz
dB
mA
A
TRMS AC
TRMS AC+DC
V W
F °C
mA
A
1000V
300 mA
10 A
fused
1000 V CAT II / 600 V CAT III
(1)
(2)
(3)
(4)
(5)
(6)
(7)

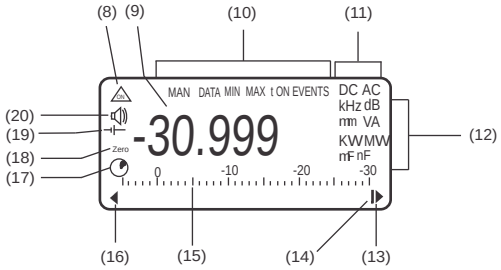
(8)
(9)
(10)
(11)
MAN DATA MIN MAX t ON EVENTS
DC AC
kHz dB
mm VA
KWMW
nF nF
-30.999
Zero
0
-10
-20
-30
(20)
(19)
(18)
(17)
(12)
(16)
(15)
(14)
(13)

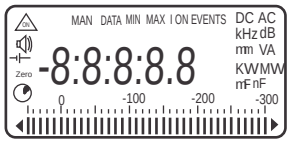
MAN DATA MIN MAX t ON EVENTS
DC AC
kHz dB
mm VA
KWMW
nF nF
-8:8:8:8.8
Zero
0
-100
-200
-300

AC current measurement with (clip-on) current transformers

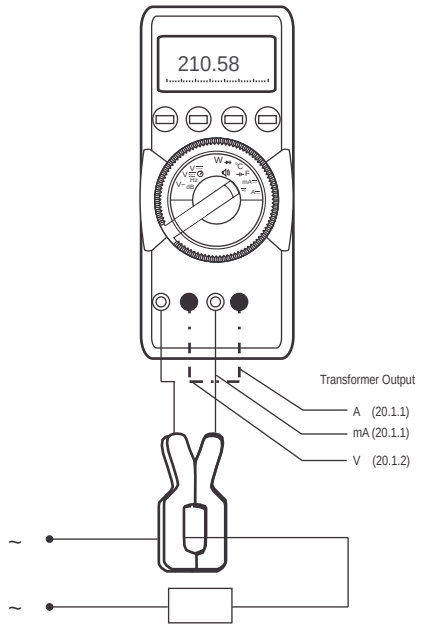

(1) Liquid crystal display
(2) ON / OFF pushbutton
(3) Pushbutton for data hold and MIN/MAX storage functions
(4) Pushbutton for manual range selection
(5) Multi-function pushbutton
(6) Function selector switch
(7) Terminal sockets with automatic blocking system
(8) symbol for"CONTINUOUSLY ON"
(9) Digital display with indication of decimal point and polarity
(10) Symbols for displaying selected functions
(11) Display for selected function
(12) Display for the unit of measured quantity
(13) Overrange indication
(14) Pointer for analog indication
(15) Scale for analog indication
(16) Indication that negative analog range is exceeded
(17) Activated stop watch indicator
(18) Zero adjust indicator
(19) Low battery indicator
(20) Buzzer indication

Contents

1. Safety features and safety precautions ... 4
2. Switching the meter on ... 5
3. Function and range selection ... 6
3.1 Autoranging ... 6
3.2 Manual range selection ... 6
4. Liquid crystal display ... 7
4.1 Digital display ... 7
4.2 Analog indication ... 7
4.3 Backlit ... 7
5. "DATA" hold / compare facility ... 7
6. Minimum value and maximum value “MIN/MAX” storage facility with time display. ... 8
7. Voltage measurement ... 8
7.1 Voltage measurement on electrical systems up to 1000 V with the KS30 measuring adapter ... 9
7.2 AC level measurement (dB) ... 9
8. Current measurement ... 11
AC current measurement with (clip-on) current transformers ... 13
9. Resistance measurement and continuity test ... 13
10. Diode test and continuity test ... 14
11. Capacitance measurement ... 15
12. Frequency measurement ... 15
13. Temperature measurement ... 16
14. Event counter ... 17
15. Stop watch ... 17
16. RS 232C interface ... 18
17. Specifications ... 20
18. Maintenance ... 28
18.1 Battery ... 28
18.2 Fuses ... 28
18.3 Case ... 29
19. Repair and replacement parts service ... 29
20. Appendix ... 29

1. Safety features and safety precautions

You have chosen a meter which offers you a very high degree of safety.
The analog/digital multimeter *RISHMulti* 18S is manufactured in compliance with the safety standard IEC 61010-1:2001 / DIN 61010-1:2001.
In case of incorrect use or careless handling, the safety of both user and multimeter is not assured.
To maintain the safe and proper condition of the meters and to ensure their safe operation, it is absolutely necessary to carefully and completely read these operating instructions before using any meter. These instructions must be followed in all respects.
For your safety and for protection of the meter, the *RISHMulti* 18S multimeter is fitted with an automatic terminal blocking system. It is coupled with the function selector switch, which blocks the terminal sockets not necessary for measurement

Please note the following safety precautions:

- The meter must only be operated by persons who understand the danger of shock hazards and know how to apply safety precautions. Shock hazards exist wherever voltages of more than 30 V (TRMS) can appear.
- Do not work alone in shock hazardous environment while carrying out measurement.
- The maximum permissible voltage between any of the terminal sockets (7) and ground is 1000 V.
- Take into account that unexpected voltages can occur on devices under test (e.g. defective instruments). Capacitors may be charged to a dangerously high voltage, for instance.
- Verify that the test leads are in good condition, e.g. no cracked insulation, no open circuits in the leads or connectors.
- This meter must not be used for measurements on circuits with corona discharge (high voltage).
- Be particularly careful when measuring on HF circuits. Dangerous composite voltages may exist there.
- Measurements under moist environmental conditions are not permitted.
- *Do not exceed the permissible overload limits of the measuring ranges.* See Table "Measuring ranges" under "17. Specifications".
- All current measuring ranges, are fused. The maximum permissible voltage of the measuring circuit (= nominal voltage of the fuse) is *1000* V AC /DC on the"mA"ranges, "A" ranges.
- You must only use the meter in *power systems,* when the current circuit is protected by a *fuse* or a *circuit breaker* of *20 A*, and when the nominal *voltage* of the system does not exceed *1000 V*.

For safe voltage measurements on power systems, up to *1000V* we recommend the *KS30* measuring adapter, which is available as accessory. Its internal resistance limits the measuring current in the case of overvoltage and incorrect operation and safely suppresses sparking from spark gaps. Also refer to Section "7.1 Voltage measurement on electrical systems up to 1000V with the KS30 measuring adapter".

Fuse replacement

➪ Open the meter same as for battery replacement.
➪ Remove the blown fuse, e. g. with the aid of a probe, and replace it with a new one.

Permissible types
- for current measuring ranges up to 300 mA:
Type FF(UR) 1.6A / 1000V AC/DC; (10kA); 6.3mm x 32mm

-for the 3A and 10A current measuring ranges:
Type FF(UR) 16A / 1000V AC/DC; (30kA); 10mm x 38mm

Caution:
Absolutely verify that only the specified fuse is Installed!
If a fuse of other cut-out capacity, other nominal current or other switching capacity is used, a dangerous situation exists for you, and there is danger of damaging protective diodes, resistors or other components.
The use of mended fuses or shorting of the fuse holder is not permissible.

18.3 Case

Special maintenance of the case is not required. Take care that the surface between the connection sockets is clean. For cleaning take a moist cloth. Avoid scrabbing.

19. Repair and replacement parts service

When you need service, please contact:

RISHABH INSTRUMENTS PVT. LTD.
F-31, M.I.D.C. Area,
Satpur, Nashik - 422 007.
Maharshtra. India.
Tel : +91-253-2202202, 2202160
Fax : +91-253-2351064, 2202302
E-mail : service@rishabh.co.in

20. Appendix

20.1 AC current measurement with (clip-on) current transformers

20.1.1 Transformer output mA/A

Caution:
If current transformers are operated with an open circuit on the secondary side, e.g. due to defective or disconnected leads, a blown fuse In the meter, or a wrong connection, dangerously high voltages can occur at the connectors. Therefore, verify that the current circuit of the meter and the secondary winding of the transformer connected to the meter form an intact circuit. Connect the transformer to the sockets ⊥ and mA and/or A.
The maximum permissible operating voltage is the nominal voltage of the current transformer. When reading the measured value, take into account the transformer ratio and the additional error in indication.

20.1.2 Transformer output V

Several transformers are fitted with a voltage output (designation mV/A).
The secondary output must therefore be connected to the connection sockets ⊥ and V.

Ambient conditions

Functional temperature range	-20 °C... + 50 °C
Storage temperature range	-25°C...+70°C
Climatic class	2z/-20/50/70/75 % with reference to VDI / VDE 3540
Altitude	up to 2000 m

Mechanical configuration

Protection type	IP 50 for the connection sockets IP 20 according to DIN VDE 0470 Part 1 / EN 60529
Dimensions	84 mm x 195 mm x 35 mm
Weight	350 g approx., including battery

18. Maintenance

Caution:
Disconnect the meter from the measuring circuit before you open it to replace the battery or the fuse!

18.1 Battery

Prior to initial start-up, or after storage of your meter, verify that the battery of your meter does not leak. Repeat this check in regular short intervals.
If the battery leaks, completely remove the battery electrolyte carefully with a moist cloth and install a new battery before you operate your meter again.
When the symbol "⊣⊢" (17) appears on the LCD (1), replace the battery as soon as possible. You can continue to measure, but a reduced measuring accuracy must be taken into account.
The meter operates with a 9 V flat cell battery according to IEC 6 F 22 or IEC 6 LR 61 or with a suitable NiCd storage battery.

Replacing the battery

➪ Place the meter on its face, loosen the two screws on the rear and remove the lower part of the case, lifting it from the bottom. The lower and the upper part of the case are fixed together at the top on the front by means of detent hooks.

➪ Remove the battery from the battery compartment and carefully disconnect the contacts from the battery.

➪ Snap the connection contacts to a new 9V battery and insert the battery into the battery compartment.

➪ Replace the lower part of the case. Start at the top on the front and take care that the detent hooks are properly engaged at this point.

➪ Tighten the lower part with the two screws.

➪ Please destroy the batteries in an environmental friendly way.

18.2 Fuses

A blown fuse is signalled on the LCD display the instant a measured quantity having a voltage of more than 4 V is applied to the corresponding connection sockets. Then, the digital display (9) shows „FUSE".
The 16 A fuse interrupts the 3 A and 10 A ranges, the 1.6 A fuse all other current measuring ranges. All other measuring ranges continue to function. When a fuse blows, first eliminate the cause of the overload before using the meter again!

Meaning of the symbols on the device

	Warning of a danger point (Attention' refer to documentation)
	Ground connector
	Double or reinforced all-insulation
CAT II/III/IV	Instrument for over voltage category II/III or IV
CE	EU conformity mark

Repair, replacement of parts and calibration

When opening the meter, live parts may be exposed. Therefore, the meter must be disconnected from the measuring circuit prior to opening its case for repair, replacement of parts or calibration. If repair or calibration cannot be avoided unless the meter is open and live, this work must only be performed by a qualified person who understands the danger involved.

Faults and extraordinary stress

When it must be assumed that safe operation is no longer possible, take the meter out of service and secure it against accidental use.
It is assumed that safe operation is no longer possible,

- when the meter shows obvious signs of damage,
- when the meter no longer functions correctly,
- after prolonged storage under adverse conditions,
- Due to severe stress during transportation.

2. Switching the meter on

Battery

Fit the meter with 9 volt flat cell battery provided along with the meter.
Before you use the meter for the first time or after storage, absolutely refer to Section "18.1 Maintenance Battery".

Switching the meter on

➪ Press the "ON/OFF" pushbutton (2).
Switch-on is acknowledged by a sound signal. As long as you keep the push-button pressed, all segments of the liquid crystal display (LCD) will appear. The LCD is shown on page 2.
After the pushbutton is released, the meter is ready for operation.

Note:
Electric discharges and high frequency interference may cause incorrect information to be displayed and block the measuring process. Reset the meter by switching it OFF and ON again. Otherwise, check the battery connections.
Disconnect the meter from the measuring circuit before you open it and see section "18. Maintenance"!

Automatic turn-off

Your meter turns off automatically, when the measured value remains constant (variations of the measured value $\leq \pm$ 20 digits) for about 10 minutes and when neither a pushbutton nor the function selector switch is operated during that time.

How to prevent automatic turn-off

Switch your meter to "CONTINUOUSLY ON"mode.

➪ To do this, press the yellow multi-function pushbutton (5) and the "ON/OFF" pushbutton (2) together. The function "CONTINUOUSLY ON" is shown on the LCD (1) by the ⚠ symbol (8).

Turning the meter off

➪ Press the "ON/OFF" pushbutton (2).

3. Function and range selection

The function selector switch (6) is coupled with the automatic terminal blocking system which only allows access to two correct sockets for each function. Prior to switching to the "mA" or "A" functions or from the "mA" or "A" functions, remove the test lead from the corresponding socket. When the test leads are plugged-in, the terminal blocking system prevents accidental switching to non-permissible functions.

3.1 Autoranging

The multimeter features autoranging for all measuring ranges except tor temperature measurement and diode test. Autoranging is automatically selected after switching the meter ON. According to the measured quantity applied, the meter automatically selects the measuring range which gives the best resolution. When switching to frequency measurement the previously selected voltage measuring range is maintained.

The meter switches automatically to:

- the next higher range	at	± (30999 digits +1 digit)
- the next lower range	at	± (2800 digits -1 digit)
For capacitance measurement the change of switchover occurs	at and	3071 digits +1 digit 280 digits -1 digit

3.2 Manual range selection

You can switch off autoranging and select and fix the ranges manually according to the table on the following page.

Manual mode is switched OFF when you press pushbutton AUTO/MAN (4) for approximately 1s, when the function selector switch (6)is operated, or when you turn the meter OFF and ON again.

⇩ AUTO/ MAN (4)	Function	Acknowledgement: Display	Acknowledgement: Sound signal
Short	Manual mode on : Used range is fixed	MAN (10)	1x
Short	Switching sequence at: V : 300 mV→ 3V→ 30V→ 300V→ 1000V→ 300 mV→... dB : = the switching sequence at V~ mA : 300 µA→3mA→30mA→300mA 300 µA... A : 3A→10A→3A... Ω: 30 MΩ→ 300Ω→ 3kΩ→ 30kΩ→ 300kΩ 3MΩ→ 30MΩ ... F : 3 nF→30nF→300nF→3 µF→30 µF→ 300 µF→ 3 000 µF→10 000 µF→3 nF …	MAN (10)	1x
Long	Return to autoranging	_	2x

Response time (after manual range selection)

Measured quantity/ measuring range	Response time: of analog indication	Response time: of digital display	Step function of the measured quantity
V⎓, V~, A⎓, A~	0.7 s	1.5 s 300 mV⎓ ; 8s	from 0 to 80 % of upper range limit
300Ω... 3MΩ	1.5s	2s	from ∞ to 50 % of upper range limit
30 MΩ	4s	5s	
→|←	0.7s	1.5s	
3nF ...300 µF	max. 2s	max. 2s	from 0 to 50 % of upper range limit
3 000 µF	max. 7s	max. 7s	
10 000 µF	max. 14s	max. 14s	
>10 Hz	max. 1.5s	max. 1.5s	
°C		max. 3s	

Power supply

Battery	9V flat cell battery; manganese-dioxide cell according to IEC 6 F 22, alkaline-manganese cell according to IEC 6 LR 61 or suitable NiCd storage battery
Lifespan	Without Backlit, using alkaline-manganese cell: approx. 120 hours on V⎓ approx. 65 hours on mV⎓, A ~, A⎓
Battery test	automatic display of the "⏚" symbol, when the battery voltage drops below approx. 7 V.

Electrical safety

Protection class II as per EN 61010-1

Overvoltage category	III	IV
Nominal voltage	1000V	600V
Contamination degree	2	2
Test voltage	6.7 kV~	As per IEC 61010-1:2001

EMC Electromagnetic compatibility

Emission	IEC 61326 : 2002 Class B	
Immunity	IEC 61326 : 2002	
	IEC 61000-4-2	8kV atmosphere discharge 4kV contact discharge
	IEC 61000-4-3	3V/m

Fuses

Fuse for the FF1.6 A /1000 V: 6.3 mm x 32 mm;

ranges up to 300 mA	rating 10 kA with 1000 V AC/DC and ohmic load; in conjunction with power diodes protects all current measuring ranges up to 300 mA.
Fuse for the ranges up to 10 A	16A/ 1000 V AC/DC ; 10 mm x 38 mm; rating 30 kA with 1000 V AC/DC and ohmic load; protects the 3 A and 10 A ranges up to 1000 V AC/DC ; see "18. Maintenance" tor manufacturers and types of fuses.

Interface

Type	RS232C, serial, to DIN 19241
Data transmission	Optically with infrared light through the case
Baud rate	8192 bits/s

Influence quantity	Range of influence	Measured quantity/ measuring range1)	Variation
Battery voltage	⊣⊢[5] ...< 7,9 V > 8,1 V ... 10,0 V	V ⎓	± 6 Digit
		V~	± 30 Digit
		A ⎓	± 30 Digit
		A~	±(1 % of rdg. + 10 Digits)
		Ω	± 10 Digit
		3 nF ... 30 µF	±10Digit
		Hz	± 6 Digit
		°C	± 5 Digit
Relative humidity	75% 3 Days meter off	V, dB,A,Ω F, Hz °C	1x intrinsic error
MIN / MAX	-	V, dB,A,Ω ,Hz	± 20 Digit
	-	°C, F	± 2 Digit
DATA	-	V, dB,A,Ω,Hz	± 10 Digit
	-	F	± 1 Digit

1) With zero adjustment
2) With temperature: Error data apply per 10 K change in temperature. With frequency : Error data apply to a display of 10 % of the measuring range.
3) With unknown waveform (crest factor CF > 2), measure with manual Range selection.
4) With the exception of sinusoidal waveform
5) After the "⊣⊢" symbol is displayed.

Influence quantity	Range of influence	Measuring ranges	Attenuation
Common mode interference voltage	Noise quantity max. 1000 V~	V⎓	>120 dB
	Noise quantity max. 1000 V~ 50 Hz, 60 Hz sinusodial	300 mV... 30 V~	> 80 dB
		300 V~	> 70 dB
		1000V~	> 60 dB
Normal mode interference voltage	Noise quantity V~, value of the measuring range at a time, max. 1000 V~, 50 Hz, 60 Hz sinusodial	V⎓	> 48 dB
	Noise quantity max. 1000 V-	V~	> 110 dB

4. Liquid crystal display

4.1 Digital display

The digital display (9) shows the measured value with correct location of decimal point and sign. The selected measuring unit (12) and the function (11) are simultaneously displayed. When measuring DC quantities, a minus sign appears in front of the digits, when the positive pole of the measured quantity is applied to the "⊥" input terminal. When exceeding the upper range limit 30999 [on the range F : 3099), "OL." is displayed.

With V, A and Ω measurements, the digital display is updated two times per second.

4.2 Analog indication

The analog indicator with pointer presentation gives the dynamic response of a moving coil movement and is updated 20 times per second. Analog indication is of particular advantage when observing variations of measured values and for calibration procedures.

The analog indicator has its own polarity indication. When measuring DC quantities. the analog scale (15) has a negative range of 5 scale divisions. so that variations of the measured values around "zero" can be observed exactly. When the measured value exceeds the range of indication, the left triangle (16) is shown before the polarity of the analog indicator switches over after approximately 0.7s. Exceeding of the measuring range (> 30999 digits, on the range F : > 3099) is shown by the right triangle (13).

The graduation of the analogue scale is automatic which is helpful for the manual range selection.

4.3 Backlit

The instrument is provided with user selectable Backlit for measurements
in poor light conditions or dark area.

Switching the Backlit ON and OFF:

By pressing "AUTO/MAN" and "DATA/MIN/MAX" keys simultaneously the Backlit can be switched ON.
And by pressing the same keys simultaneously Backlit can be

5. "DATA" hold / compare facility

The DATA (hold) function allows you to automatically "hold" measured values This is particularly useful, for instance, when applying the probes to the measuring point requires full attention. When the measured value is applied and the "condition" according to the table shown below is met, the meter holds the measured value on the digital display and issues a sound signal. The probes can now be removed from the measuring point and the measured value on the digital display (9) can be read. When the measured value falls below the limit specified in the table, the meter is reactivated for a new storage.

If the new stored value differs by less than 100 digits from the previous value the sound signal is issued twice (DATA-Compare).

Function DATA	⇩ DATA MIN/MAX (3)	Condition: Measuring ranges	Condition: Limit of measured values (digits)	Meter reaction: Display Meas. value digital	Meter reaction: Display DATA	Meter reaction: Sound signal
Activate	short				flashes	1x
Store		V,dB[2],A,Hz Ω F	> 2800 < OL > 280	dis-played	dis-played	1x 2x[3]
Reactivate[1]		V,dB[2],A,Hz Ω F	< 2800 OL < 280	stored mea-sured value	flashes	
Reset	long			cleared	cleared	2x

1) Reactivated by falling below the specified limits of the measured value
2) Refering to AC values
3) When storing a value for the first time twice a sound signal
For following "holds" only twice if actual hold value differs from first stored value by less than 100 digits
The analog indication is not influenced by the DATA hold. You can still read the actual measured value. Note that with a "held" digital display, the location of the decimal point is also held.
As long as the DATA hold function is active, manual range selection is not possible.
The DATA hold function is switched off, when the "DATA" pushbutton (3) is pressed for approximately 1s, when the function selector switch (6) is operated, or when the meter is turned OFF and ON again.

6. Minimum value and maximum value "MIN/MAX" storage facility with time display

With the MIN/MAX function, you can "hold" the minimum and the maximum measured value which was applied to the input of the meter after activating MIN/MAX. The most important application is the determination of the minimum and the maximum value for long-term monitoring of measured quantities.
The function "MIN/MAX" can be activated in all ranges except for the diode test. However, for frequency and capacitance measurement the relative time display is not possible.
MIN/MAX does not influence the analog indication; you can still read the actual measured value.
Apply the measured quantity to the meter and select the measuring range prior to activating the MIN/MAX function.
With the function activated, you can only select the measuring ranges manually. However, the stored MIN/MAX values are cleared.
The MIN/MAX function is switched off, when the MIN/MAX pushbutton (3) is pressed for approximately 1s, when the function selector switch (6) is operated, or when the meter is turned OFF and ON again.

Function MAN/MAX	⇩ DATA MIN/MAX (3)	Measured values MIN and MAX / Elapsed times	Meter reaction Display: Measured value digital	Meter reaction Display: MIN/MAX	Sound signal
1. Activate and store	2 x short ↓	stored	actual Measured value	MIN and MAX flash	1x
2. Store and display	short ↓	Storage continued in the background, new MIN and MAX values and elapsed times are displayed	stored MIN value	MIN	1x
	short ↓		Elapsed time until stored MIN value	MIN and t	1x
	short ↓		stored MAX value	MAX	1x
	short ↓		Elapsed time until stored MAX value	MAX and t	1x
3. Return to 1.	short ↓	same as 1., Stored values are not cleared	same as 1.	same as 1.	1x
Reset	long	cleared	cleared	cleared	2x

7. Voltage measurement

➪ According to the voltage to be measured, set the function selector switch (6) to V~, V⎓ or V⎓~ .

Influence quantities and variations

Influence quantity	Range of influence	Measured quantity/ measuring ranges1)	variation2) ±(... % of rdg. +... digits)
Temperature	-10 °C ... +21 °C and +25°C ... +40 °C	V⎓	0.15 +5
		V~, V⎓~	0,2 + 30
		300µ A⎓3mA	0,2 + 3
		30 mA⎓	0,1 + 3
		300 mA... 10 A⎓	0,2 + 3
		300µA... 300 mA⎓~	0,3 + 30
		3 A / 10 A⎓~	0,5 + 30
		300Ω	0,1 + 5
		3k... 3MΩ	0,1 + 3
		30MΩ	0,6 + 3
		3 nF ... 3µF	0,5 + 3
		30 µF	2,0 + 3
		Hz	0,1 + 3
		-200 ... + 100 °C	0,5 Kelvin + 2 Digit
		+100 ... +850 °C	0,5 + 2
Frequency of the measured quantity	15 Hz... < 45 Hz	300 mV~	1,0 + 20
	> 65 Hz...200 Hz		1,4 + 20
	15 Hz... < 30 Hz	3... 300 V~	1,0 + 20
	30 Hz... < 45 Hz		0,5 + 20
	> 65 Hz... 400 Hz		0,5 + 20
	> 400 Hz...1kHz		1,0 + 20
	>1 kHz... 20kHz		2,0 + 20
	15 Hz... < 30 Hz	1000 V~	1,0 + 20
	30 Hz... < 45 Hz		0,5 + 20
	> 65 Hz... 1 kHz		2,0 + 20
	15 Hz... < 45 Hz	A~	1,0 + 20
	>65 Hz... < 1 kHz		1,0 + 20
	Crest-factor CF 1 ... 3	V~4), A~4)	± 1 % v. M.
	Crest-factor CF > 3 ... 5		± 3 % v. M
Waveform of the measured quantity5)	The permissible crest factor CF of the AC quantity to be measured function of the displayed value: Voltage measurement: CF 5 4 3 2 1 0; 0 500 V 1000 V. Current measurement: CF 5 4 3 2 1 0; 0 1000 20000 30000 Digit		

Reference conditions

Ambient temperature:	+23 °C ± 2 K
Relative humidity:	45 % ... 55 % RH
Frequency of the measured quantity:	45 Hz ...65 Hz
Waveform of the measure d quantity:	sinusoidal
Battery voltage:	8V±0,1V

Display

Liquid crystal display section (65 mm x 30 mm) with analog indication and digital display and with display of the unit of measured quantity, function and various special functions.

Analog:

Indication	LCD scale with pointer
Scale length	55 mm on V⎓ and A⎓ 47 mm on all other ranges
Graduation	± 5 ... 0 ...± 30 with 35 scale divisions on ⎓ ,
	0 ... 30 with 30 scale divisions on all other ranges
Polarity indication	with automatic change-over
Overrange indication	by triangle (13)
Sampling rate	20 readings/s

Digital:

Display / Height of numer.	7-segment numerals /12 mm
Number of digits	4¾ digits ≙ 31000 counts
Overrange Indication	"OL" is displayed
Polarity Indication	"-" sign is displayed, when the positive pole is at "⊥"
Sampling rate	2 readings / sec

➪ Connect the test leads as shown. The "⊥" socket should be connected to the lowest potential ground available.

Notes:

On the 1000 V range, an intermittent sound signal warns you, when the measured value exceeds the upper range limit.

Caution:

Ensure that a current measuring range ("mA" or "A") is not selected, when you connect your multimeter for voltage measurements! When the cut-out rating of the fuses is exceeded because of incorrect operation, a dangerous situation exists!

Zero adjustment on the 300 mV⎓ measuring range

You can adjust the zero on the 300 mV⎓ measuring range:

➪ Connect the test leads to the meter and join the free ends.

After having selected the measuring range, briefly press the yellow multi-function pushbutton (5).

The meter acknowledges zero setting by a sound signal, the LCD shows "000,00"(± 1 digit) and the symbol "ZERO" (18) is displayed. The voltage displayed the instant the pushbutton is pressed is used as reference value (max. ± 2000 digits). It is automatically deducted from the values measured there after

You can clear the zero adjustment

- by pressing the yellow multi-function pushbutton (5) for a long time, clearance is acknowledged by the buzzer sounding twice.
- by switching the instrument off.

7.1 Voltage measurement on electrical systems up to 1000 V with the KS30 measuring adapter

On low-voltage systems, transient overvoltages of several kilovolts can occur due to switching functions or lightning discharges. Direct connection of your multimeter to such systems for voltage measurement can, therefore, be dangerous.

For voltage measurements on power systems with nominal voltages up to 1000 V. use the KS30 measuring adapter. It is an adapter for multimeters which eliminates dangers caused by overvoltages and incorrect operation of the multimeter. It provides the following protective functions:

- Protection of the input circuit to the voltage measuring range of multimeters The internal resistance of the KS30 limits the current in the case of overvoltage.
- Overload capacity: continuously 1000 V_{rms}
  transient (rise 10 µs/fall 1000 µs) 6 kV max
- Safe suppression of sparking from spark gaps after overvoltage.
- Current limitation in the case of incorrect operation (e.g applying a voltage to a current input)

Using the measuring adapter KS30 the additional measured fault is approx. -2%. Voltages above 1000 V can be measured with a high voltage probe, provided the necessary safety precautions are taken!

7.2 AC level measurement (dB)

➪ Set the function selector switch (6) to V ~.

Briefly press the multifunction button (5).

The function level measurement is activated now. The measured value is calculated from the true rms value of the AC voltage (300 mV ...1000 V) and displayed on the LCD display (9). The reference value is taken as 0 dB = 0.775 V (1 mW on 600Ω). The corresponding AC voltage is displayed on the analog

Voltage measurement

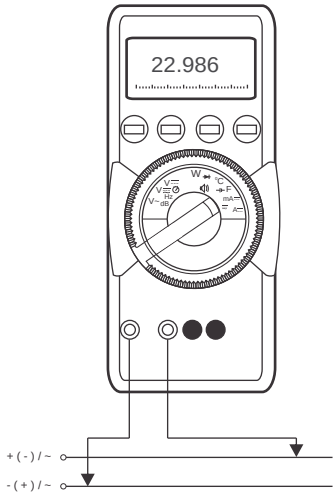

Voltage measurement on electrical system up to 1000 V with the KS30 measuring adapter

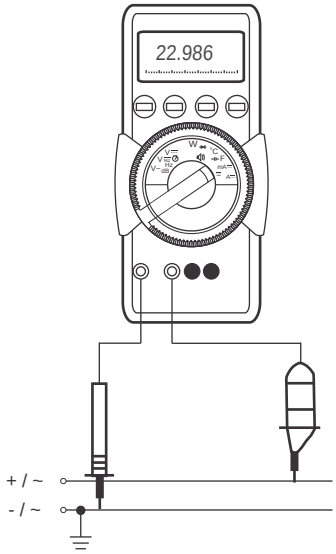

Intrinsic error of digital display ±(...% of rdg.+... digits) at reference conditions	Overload capacity[2]	
	Overload value	Overload duration
1,0 + 8; 1.0 + 60[3]	1000 V DC AC rms /sine	1 min
1,0 + 8; 1.0 + 30[3]		
1.0 + 3		
1.0 + 3		
1.0 + 3		
5.0 + 6		
5.0 + 6		
5.0 + 6		
0,1 + 3[7]	≤3 kHz 1000 V ≤30 kHz 300 V ≤100 kHz 30 V	continuou-sly
0,5 Kelvin + 3 [8]	1000 V DC AC rms sine	1 min
0,5 + 3 [8]		
0,5 Kelvin + 3 [8]		
0,5 + 3 [8]		

7) Range/300mV ~ : U_e = 250mV$_{eff/rms}$...300mV$_{eff/rms}$
3V ~ : U_e = 1V$_{eff/rms}$...10V$_{eff/rms}$
30V ~ : U_e = 10V$_{eff/rms}$...100V$_{eff/rms}$
300V ~ : U_e = 100V$_{eff/rms}$...1000V$_{eff/rms}$

8) Without sensor

Measure-ment funcation	Measuring range		Resolution	Discharge resistance	$U_{0\,max}$
F	3,000 nF		1 pF	1.5 MΩ	4 V
	30,00 nF		10 pF	1.5 MΩ	4 V
	300,0 nF		100 pF	150 kΩ	4 V
	3,000 µF		1 nF	150 kΩ	4 V
	30,00 µF		10 nF	15 kΩ	2 V
	300,0 µF		100 nF	1.5 kΩ	2 V
	3000 µF		1 µF	1.5 kΩ	2 V
	10000 µF		10 µF	1.5 kΩ	2 V
				f_{min} 6)	
Hz	300,00 Hz		0.01 Hz	10 Hz	
	3,0000 kHz		0.1 Hz	10 Hz	
	30,000 kHz		1 Hz	10 Hz	
	100.00 kHz		10 Hz	100 Hz	
°C	Pt 100	-200,0... + 100,0 °C	0,1 °C	-	-
		+100,0... + 850,0 °C	0,1 °C	-	-
	Pt 1000	-100,0... + 100,0 °C	0,1 °C	-	-
		+100,0... + 850,0 °C	0,1 °C	-	-

2) At -10 °C ... + 40 °C

3) With zero adjuster; without zero adjuster

6) Lowest measurable frequency with a sinusoidal measuring signal which is symmetrical to zero

scale.

➪ *Note:*

The multimeter does not contain termination resistors. The input impedance is 5 MΩ respectively. In order to measure correctly on unterminated objects, you have to connect the termination resistor to the terminals. Please take the power dissipated by the termination resistor into consideration.

Reference measurements

➪ Briefly press the multifunction button (5) again.
The terminal input AC voltage is displayed and the "ZERO" indicator (18) flashes.

➪ Briefly press the multifunction button (5) again.
The displayed AC voltage is taken as the reference value. The "ZERO" indicator (18) does not flash anymore, but remains continued on.
You can now perform level measurements over several voltage ranges relation to the stored reference value. Note, however, that the maximally allowed measuring voltage is 1000 V. The following table shows the display range.

➪ By briefly pressing the multifunction button (5) again you return to the voltage measurement with the flashing "ZERO" indicator (18).

The function "dB-measurement" is deactivated by pressing the multifunction button for a long period (about 1s), or by changing the function selector switch getting or by turning the multimeter off and then on again.

dB ranges

Measurement ranges	**Display at reference Voltage U=0.775 V**	**Display at reference Voltage U_{ref}(V)**
300 mV~	-48 dB ... - 8 dB	-40 dB ... + 110 dB
3 V~	-38 dB ... + 12 dB	-60 dB ... + 100 dB
30 V~	-18 dB ... + 32 dB	-80 dB ... + 80 dB
300 V~	+2 dB ... + 52 dB	-100 dB ... + 60 dB
1000 V~	+22 dB ... + 63 dB	-110 dB ... + 40 dB
	Display (dB) = 20 lg (Ux (V) / 0.775V)	Display (dB) = 20 lg (Ux (V) / U_{ref}(V))

8. Current measurement

➪ First disconnect the power supply to the circuit being measured and/or to the load, and discharge all capacitors within that circuit.

➪ With the function selector switch (6), select A⎓ for currents > 300 mA, and mA⎓ for currents < 300 mA. When measuring currents of unknown magnitude, *select the highest measuring range first*.

➪ Select the function corresponding to the measured quantity by briefly pressing the yellow multi-function pushbutton (5). Each time the pushbutton is pressed, alternate switching takes place between DC and (DC + AC) and the change-over is acknowledged by a sound signal. The symbols DC and AC (11) show the selected function on the LCD.
When selecting a range with the function selector switch (6), the DC function is always set initially. When pressing the yellow multi-function pushbutton (5) for a long time, the meter always switches back to DC and acknowledges this by the buzzer sounding twice.

➪ Connect the meter in series with the load, as shown. Make the connections tight (without contact resistance).

Notes on current measurement:

• The meter must be used only in power systems, when the current circuit is protected by a fuse or a *circuit breaker* of 20 A, and when the *nominal*

Current measurement

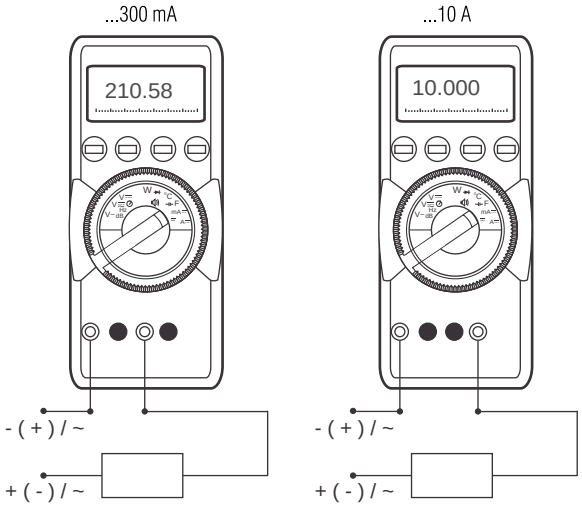

AC current measurement with (clip-on) current transformer

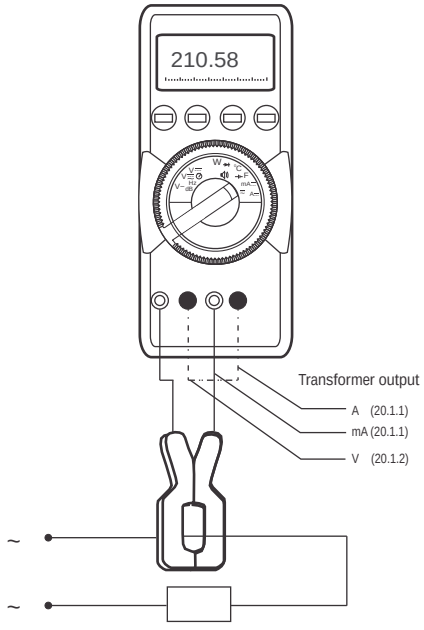

Intrinsic error of digital display ±(...% of rdg.+... digits) at reference conditions			Overload capacity[2]	
			Overload value	Overload duration
⎓	~[1]	≂[1]		
0.05 + 3; 0,05. + 20[3]	1,0 + 30(>600 Digit)	1+30[6]	1000 V DC AC rms sine	continu-ously
0.05 + 3	0,5 + 30(>300 Digit)	1+30[6]		
0.05 + 3	0,5 + 30(>300 Digit)	1+30[6]		
0.05 + 3	0,5 + 30(>300 Digit)	1+30[6]		
0.05 + 3	0,5 + 30(>300 Digit)	1+30[6]		
-	± 0.5 dB[4]			
⎓	≂[1]			
0,2 + 20	1.5+30[6]		0.36 A	continuously
0,2 + 10	1.5+30[6]			
0,05 + 10	1.5+30[6]			
0,2 + 10	1.5+30[6]			
0,5 + 10	1.5+50[6]		12 A[5]	5 min
0,5 + 10	1.5+30[6]			
0,1 + 6; 0,1 + 30[3]			1000 V DC AC rms sine	1 min
0,1 + 6				
0,1 + 6				
0,1 + 6				
0,1 + 6				
1,0 + 6				
0,2 + 3				

3) With zero adjuster; without zero adjuster

4) At a resolution of 0.01 dB

5) 16 A 30s

6) Specified accuracy is valid for > 3% of measuring range.

17) Specifications

Measurement function	Measuring range	Resolution	Input impedance	
			⎓	~[1] ⎓[1]
V	300,00 mV	10 µV	>10 GΩ	5 MΩ//<40 pF
	3,0000 V	100 µV	11 MΩ	5 MΩ//<40 pF
	30,000 V	1 mV	10 MΩ	5 MΩ//<40 pF
	300,00 V	10 mV	10 MΩ	5 MΩ//<40 pF
	1000,0 V	100 mV	10 MΩ	5 MΩ//<40 pF
dB	see paragraph 7.2		-	as at V~
			Voltage drop approx.	
			⎓	⎓[1]
mA	300,00 µA	10 nA	15 mV	15 mV
	3,0000 mA	100 nA	150 mV	150 mV
	30,000 mA	1 µA	30 mV	30 mV
	300,00 mA	10 µA	300 mV	300 mV
A	3,0000 A	100 µA	150 mV	150 mV
	10,000 A	1 mA	400 mV	400 mV
			No-load voltage	Short-circuit current
Ω	300,00Ω	10 mΩ	max. 4.00 V	max. 1 mA
	3,0000 kΩ	100 mΩ	max. 1.25 V	max. 100 µA
	30,000 kΩ	1Ω	max. 1.25 V	max. 10 µA
	300,00 kΩ	10Ω	max. 1.25 V	max. 1 µA
	3,0000 MΩ	100Ω	max. 1.25 V	max. 0.1 µA
	30,000 MΩ	1 kΩ	max. 1.25 V	max. 0.1 µA
→|	3,0000 V-	1 mV	max. 4.00 V	-

1) TRMS measurement

Values < 100 Digit (<500 Digit for measuring range 300 mV) will be supressed

2) At -10 °C ... + 40 °C

Voltage of the system does not exceed 1000 V.

- Make the measuring circuit connections mechanically strong and secure so that they do not accidentally open. The conductor cross sections and connection points should be designed to avoid excessive heating.
- On the 300mA and 10A ranges, an intermittent sound signal warns you, when the measured value exceeds the upper range limit.
- The current measuring ranges up to 300 mA are protected to a short circuit current of 25 A by a fuse FF1.6/1000V in conjunction with power diodes. The cutout capacity of the fuse is 10 kA at a rated voltage of 1000 V and ohmic load.
- The current measuring ranges up to 10A are protected by a 16A/1000 V fuse.The cut-out capacity of the fuse is 30 kA at a nom. voltage of 1000 V and ohmic load.
- A blown fuse is signaled on the LCD the instant a measured quantity having a voltage of more than 4 V is applied to the corresponding connection sockets. Then, the digital display (9) shows the word "FUSE".
- After a fuse has blown, eliminate the cause of the overload before using the meter again!
- Replacement of the fuses is described in section "18. Maintenance".

AC current measurement with (clip-on) current transformers

See appendix section 20.1.

9. Resistance measurement and continuity test

➪ Verify that the device under test is electrically dead. External voltages would falsify the measured result!

➪ Set the function selector switch (6) to "Ω".

➪ Connect the device under test as shown.

Zero adjustment on the measuring ranges 300Ω to 3kΩ

When measuring small resistance values on the 300Ω and 3kΩ range, you can eliminate the resistance of the leads and transient resistances by zero adjustment:

➪ Connect the test leads to the meter and join the free ends.

➪ Briefly press the yellow multi-function pushbutton (5).

The meter acknowledges zero adjustment by a sound signal, the LCD shows "000,00" resp. "0,0000" (+1 digit) and the symbol "ZERO" (18) is displayed. The resistance measured the instant the pushbutton is pressed is used as reference value (max. 2000 digits). It is automatically deducted from the values measured thereafter.

You can clear the zero adjustment

-by pressing the yellow multifunction pushbutton (5) for a long time, clearance is acknowledged by the buzzer sounding twice,

- by switching the instrument off

Continuity test with buzzer

With "buzzer" function activated, the meter issues a continuous sound signal below 100.00 Ω on the 300.00 Ω range only.

➪ **To switch buzzer ON:**

Select range 30 kΩ , 300 kΩ, 3 MΩ, or 30 MΩ, through manual mode and briefly press the yellow multi function key(5). The meter will show "cont.n" on display. Press "AUTO/MAN" key. The meter will show "cont.y" on display.

Now press the yellow key(5) again. Th symbol 🔈 (20) appears on the display when 300.00Ω range is selected.

➪ **To switch buzzer OFF:**

Select range 30 k Ω, 300 k Ω, 3 M Ω, or 30 M Ω , through manual mode and briefly press the yellow multi function key(5). The meter will show "cont.y" on display. Press "AUTO/MAN" key. The meter will show "cont.n" on display.

Now press the yellow key(5) again. Th symbol 🔈 (20) disappears on the display when 300.00 Ω range is selected.

Resistance measurement

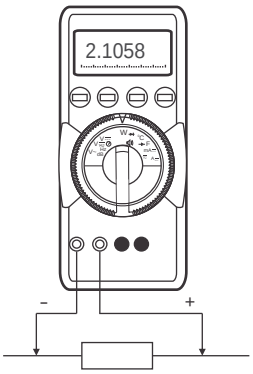

Diode test

Forward direction

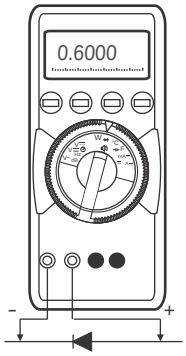

Reverse direction

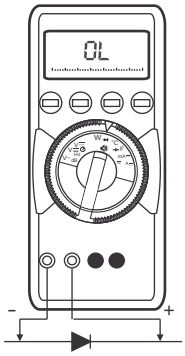

Continuity test/

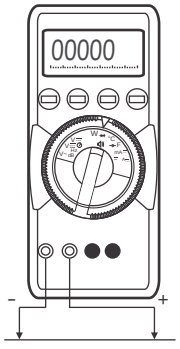

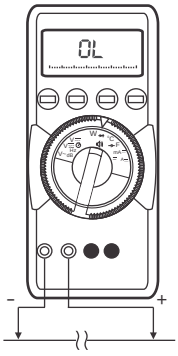

Hardware: You need

- An IBM AT-compatible PC with 640 kB main memory for the DOS version
  A WINDOWS-executing, IBM compatible PC with 2 MB main memory for the WINDOWS version
- A VGA or EGA monitor;
  a Herkules monitor can also be used for the DOS version
- A hard disk with 3 MB free storage space
- A 3.5" disk drive far disks with 1.4MB storage capacity

- A MICROSOFT-compatible mouse
- If you wish to make hardcopies
  an EPSON compatible printer when using the DOS version,
  a printer supported by WINDOWS when using WINDOWS.

➪ Briefly press the yellow multi-function pushbutton (5).
"00:00:00" and the stop watch symbol (17) are displayed on the LCD.
➪ The stop watch is started and stopped by pressing the "AUTO/MAN" pushbutton (4). The display is in minutes, seconds and tenth of seconds.
➪ The time can be cleared by pressing the "DATA-MIN/MAX" pushbutton (3).
➪ Briefly press the multi-function pushbutton (5) in order to return to voltage measurement.

16. RS-232C interface

The *RISH Multi* 18S multimeter is fittted with a serial RS-232C interface for transmission of measured data to electronic data processing systems. The measured values are optically transmitted through the case with infrared light to an interface adapter which is attached to the multimeter. The measured data is passed to the computer via a cable.

Switching the interface ON

➪ When switching on the instrument press the "ON/OFF" pushbutton (2) and the "DATA-MIN/MAX" pushbutton (3) together. With the interface switched on, automatic turn-off of the meter is inactive. This is shown on the LCD (1) by flashing of the ⚠ (8) symbol.
The "DATA" function cannot be activated.

Interface packs as accessories

Interface adapters without memory permit a transmission of measured data up to 4 multimeters to the computer (One-channel interface pack or four-channel interface pack).
With a **memory adapter** it is also possible to store the measured data without computer for a later transmission of the memorized data to the computer. For establishing a powerful multimeter system you can connect up to ten multimeters offline. In online a connection up to six multimeters to the computer is possible via memory adapter. (One-channel memory pack or four-channel memory pack)
All interface packs include the adapters, the necessary connection cables and the RISH com 100 / *RISH Multi* data acquisition and evaluation software with operating instructions.

RISH com 100 / *RISH Multi* software

The RISH com 100 / *RISH Multi* software package consists of a DOS version and a WINDOWS version.
With RISH com 100 / *RISH Multi* you can simultaneously acquire, store, display and document the measured data of several *RISH Multi* multimeters.
The measured values can be presented in the WINDOWS version:
- As digital display and analog indication similar to that of the multimeter (up to 4 multimeters)
- In traces (XY and Yt) as on a 4-channel recorder
- In tabular form (data logger: up to 10 channels).

The DOS version only allows the recorder presentation Yt.
The measured data is stored in ASCII format for further processing.
For the use of RISH com 100 / *RISH Multi* the following requirements must be met:
Software: You need
- MS DOS or PC DOS, version 5.0 or higher
- MS WINDOWS 3.1 or higher, if you wish to work with the WINDOWS version

10. Diode test and continuity test

➪ Verify that the device under test is electrically dead. External voltages would falsify the measured result!
➪ Set the function selector switch (6) to "⇥".
➪ Connect the device under test as shown.
Forward direction and/or short circuit:
The meter displays the forward voltage in Volts. As long as the voltage drop does not exceed the maximum display value of 3.0999 V, you can also test several series-connected elements or reference diodes with small reference voltage.
Reverse direction or interruption:
The meter indicates overrange "OL".
Note:
Resistors and semiconductor junctions in parallel with the diode falsify the measured result!

Diode test and continuity test with buzzer

With the "buzzer" function selected, the meter issues a continuous sound signal on the range 0 . . . approx. 0.2 V.
To switch the buzzer ON:
➪ Briefly press the yellow multi-function pushbutton (5).
The meter acknowledges turn-on with a sound signal. At the same time, the Symbol 🔊 (20) appears on the LCD.
To switch the buzzer OFF:
➪ Briefly press the yellow multi-function pushbutton (5) again.
The meter acknowledges turn-off with a sound signal. The symbol 🔊 (20) disappears from the LCD.
When selecting the function "Diode test and continuity test" with the function selector switch (6), the buzzer is always switched off. Repeated brief pressing of the multifunction pushbutton (5) alternately switches the buzzer on and off. When pressing the pushbutton for a long time, the buzzer is always switched off, this is acknowledged by the buzzer sounding twice.

11. Capacitance measurement

➪ Verify that the device under test is electrically dead. External voltages would falsify the measured result!
➪ Set the function selector switch (6) to "F".
➪ Connect the (discharged!) device under test to the "⊥" and "F" sockets via test leads.
Notes:
Connect polarized capacitors with the "-" pole to the "⊥" socket.
Resistors and semiconductor junctions in parallel with the capacitor falsify the measured result!

Zero adjustment on the measuring ranges 3 nF to 30 nF

When measuring small capacitance values on the 3 nF and 30 nF range, you can eliminate the internal resistance of the meter and the capacitance of the leads by zero adjustment:
➪ Connect the test leads to the meter without the device under test.
➪ Briefly press the yellow multi-function pushbutton (5).
The meter acknowledges zero adjustment hy a sound signal, by displaying "0,000" resp. "00,00" (+1 digit) and the symbol "ZERO" (18) on the the LCD. The capacitance measured the instant the pushbutton is pressed is used as reference value (max. 500 digits). It is automatically deducted from the values measured thereafter.
You can clear the zero adjustment
- by pressing the yellow multi-function pushbutton (5) lor a long time, clearance is acknowledged by the buzzer sounding twice,
- by switching the instrument off.

12. Frequency measurement

Frequency measurement is only possible with a voltage measurement in the (DC+AC) mode.

➪ Set the function selector switch (6) to V⎓

➪ Connections are made the same way as for voltage measurement. See foot note 6) on page 22.

➪ Briefly press the yellow multi-function pushbutton (5).
The meter switches to frequency measurement. The frequency is displayed on the LCD.
See Section "17. Specifications" for the lowest measurable frequencies and the maximum permissible voltages.

➪ From frequency measurement, you can directly switch back to voltage measurement

- by pressing the yellow multi-function pushbutton (5) for a long time. The meter acknowledges this with the buzzer sounding twice. The voltage measuring range last selected is maintained.
- by operating the function selector switch (6).

13. Temperature measurement

With Pt 100 and Pt 1000 temperature sensors you can measure temperatures on the range from- 200 (-100) ^{0}C ...+ 850 ^{0}C

➪ Set the function switch (6) to "^{0}C".

➪ Connect the sensor to the two sockets for which access is allowed.

The meter automatically detects the connected sensor (Pt 100 or Pt 1000) and shows the measured temperature in ^{0}C on the digital display.

Notes:

This measurement automatically considers the lead resistance of the RISHABH temperature sensors which are available as accessory.

Temperature measurement

considering sensor lead resistances up to 50Ω

Lead resistances of sensors having a value differing from that of RISHABH sensors can be considered up to a value of 50Ω as follows:

➪ Briefly press the yellow multi-function pushbutton (5).
The temperature measurement range is now selected which considers a changed lead resistance of the sensor. This is indicated on the LCD by the "ZERO" symbol.

➪ Briefly press the yellow multi-function pushbutton (5) again.
The LCD now displays the resistance value which the meter automatically considers. So that you can recognize that this is the resistance correction value on the temperature measuring range, the "^{0}C" character is simultaneously shown.

➪ You can set the line resistance correction value as follows:
Press the DATA-MIN/MAX pushbutton (3) to increment the value, or the AUTO/MAN pushbutton (4) to decrement the value. Each time the pushbutton is briefly pressed, the value changes by one digit. You pass through fast, when you press the pushbutton longer.

➪ Briefly press the yellow multi-function pushbutton (5) again.
The LCD displays the measured temperature in consideration of the changed lead resistance. The symbol "ZERO" (18) in the LCD shows you this.

➪ Each following time the yellow multi-function pushbutton (5) is briefly pressed, the display changes between measured temperature with changed lead resistance and correction value of the lead resistance.
You can exit the function "temperature measurement with changed lead resistance"

- by pressing the yellow multi-function pushbutton (5) longer, this is Confirmed by the buzzer sounding twice,
- by switching the meter off.

Note:

The correction value for the lead resistance remains stored when exiting the function and when switching off the multimeter.

To determine the lead resistance, only use the multimeter you use to measure the temperatures. Only this way, it is assured that the measuring error is within the specified range.

14. Event counter

Event counter is only possible with a voltage measurement in (DC+AC) mode.

With this function it is possible to measure and indicate the number of elapsed time of the events and the total of the function activation. Voltage signals are indicated with an amplitude of ≥2 500 digits, with a maximum, repitition rate of 0.25 Hz (minimum, duration of 4 seconds) and a minimum, event time of 2 seconds.

➪ Set the funciton switch (6) to V⎓.

➪ Switch the signal on as for voltage measurement.
For other functions see the following table.

With this function the meter *is not switched off automatically.*

It is possible to return directly from event counter to voltage measurement

- by pressing the yellow multi-function pushbutton (5) longer. This is confirmed by the buzzer sounding twice. The voltage measuring range which was set the last time, keeps switched on.
- by actuating the function switch (6).

⇩ Multi-Function-key (5)	Function	Reaction of multimeter	
		Display	Sound signal
short ↓	1. Frequency measurement	Frequency	1x
short ↓	2. Function EVENTS is activated; Events (>2 500 digits) are counted	Actual voltage; "EVENTS" flashes	1x
short ↓	3. Number of events since beginning of activation; event counting continues in the background	Number of events "EVENTS" (up to 99999)	1x
short ↓	4. Cumulated on time of all events >2 500 digits max. 99 hours 59 min.	t ON EVENTS	1x
short ↓	5. Elapsed time since activation max. 99 hours 59 min	t	1x
short ↓	Back to the 2.; number of recorded events is kept; events counting continues in the background	Actual voltage; "EVENTS" flashes	
long	clear	Actual voltage	2x

15. Stop watch

This function allows you to measure elapsed times up to one hour.

➪ Run the function selector switch (6) to "V⎓"

➪ Use the pushbutton "AUTO/MAN" (4) to select a measuring range between 3 V and 1000 V.

➪ The function stop watch cannot be activated in the range 300 mV⎓.